CYLINDER 3
SUSPENDED CABLE UP/ DOWN

PROJECT NAME:	TYPE:

Our best-selling cylinders keep getting better. Suspended cylinders are offered in a broad range of sizes and more than a dozen finish options, with field-cuttable cables and lumens from 800 to almost 4000lm.

ORDERING INFORMATION

Quick Ship Product. All rough in components ship within 10 days up to quantities of 100.

TITLE 24 COMPLIANT — JA8-2022 COMPLIANCE INDICATED BY SHADING

CYLINDER	LENGTH	FUNCTION	RATING	CYLINDER FINISH	BAFFLE FINISH	CRI / WATTAGE PACKAGE	CCT	LOWER OPTIC (UGR)	LOWER MEDIA	POWER SUPPLY	MOUNTING
CP3X		**U**	**1**								
CP3X 3.91" Ø	**096W** 96" White **192W** 192" White **096B** 96" Black **192B** 192" Black **XXXB** Black Cable* **XXXW** White Cable* ***(Specify length in inches)** ***(Cable is field cuttable)**	**U** Up/Down	**1** Dry / Damp (IP30)	**POWDERCOAT FINISHES** **WH** White **AG** Satin Silver **AU** Cashmere Gold **AB** Architectural Bronze **BB** Burnt Bronze **BK** Black **CF** Custom Finish* *(Consult Factory) **ALUMINA FINISHES** **01** Brushed Obsidian **02** Matte Obsidian **03** Brushed Dark Patinated Bronze **04** Matte Dark Patinated Bronze **05** Brushed Aged Aluminum **06** Matte Aged Aluminum **07** Brushed Cast Brass **08** Matte Cast Brass **09** Brushed Light Patinated Bronze **10** Matte Light Patinated Bronze	**POWDERCOAT FINISHES** **WH** White **AG** Satin Silver **AU** Cashmere Gold **AB** Architectural Bronze **BB** Burnt Bronze **BK** Black **CF** Custom Finish* *(Consult Factory) **ALUMINA FINISHES** **01** Brushed Obsidian **02** Matte Obsidian **03** Brushed Dark Patinated Bronze **04** Matte Dark Patinated Bronze **05** Brushed Aged Aluminum **06** Matte Aged Aluminum **07** Brushed Cast Brass **08** Matte Cast Brass **09** Brushed Light Patinated Bronze **10** Matte Light Patinated Bronze	**STATIC WHITE** **80S11B** 80+ CRI, 11W Down, 14W Up Down: 1240 lm delivered Up: 1235 lm delivered **80S17B** 80+ CRI, 17W Down, 14 W Up Down: 1943 lm delivered Up: 1235 lm delivered **80S23B** 80+ CRI, 23W Down, 14 W Up Down: 2559 lm delivered Up: 1235 lm delivered **90S11B** 90+ CRI, 11W Down, 14W Up Down: 1060 lm delivered Up: 1074 lm delivered **90S17B** 90+ CRI, 17W Down, 14W Up Down: 1661 lm delivered Up: 1074 lm delivered **90S23B** 90+ CRI, 23W Down, 14W Up Down: 1642 lm delivered Up: 1074 lm delivered **WARM DIM** **90W15A** 90+ CRI, 15 Down, 14W Up Incandescent Profile Down: 1144 lm delivered Up: 1227 lm delivered Standard Profile Down: 1076 lm delivered Up: 1227 lm delivered **90W24B** 90+ CRI, 24W Down, 14W Up Incandescent Profile Down: 1642 lm delivered Up: 1227 lm delivered Standard Profile Down: 1777 lm delivered Up: 1227 lm delivered *ALL DELIVERED LUMEN OUTPUTS AND REFLECT 3000K PAIRED WITH 20° OPTIC AND SOFT FOCUS LENS.	**24** 2400K* *(90+CRI only) **27** 2700K **30** 3000K **35** 3500K **40** 4000K **WL** 2700K - 1800K **WD** 3000K - 1800K **WL** 2700K - 1800K **WD** 3000K - 1800K	**10** 10°* (<10) *(17 Watts only) **15** 15° (<13) **20** 20° (<10) **25** 25° (<10) **40** 40° (<10) **60** 60° (<13) **20** 20° (<10) **25** 25° (<10) **40** 40° (<10) **60** 60° (<10) *SEE PAGE 3 FOR UGR VALUES	**STANDARD MEDIA** **4** Soft Focus Lens (SFL)* *(Required for 10° optic) **ALTERNATE MEDIA** **0** No Lens* *(Not available for Warm Dim) **2** Honey Comb Louver (HCL)* *(Not available for Warm Dim) **3** Clear Glass Lens (CGL)* *(Not available for Warm Dim) **5** Frosted Glass Lens (FGL) **6** Frosted Soft Focus Lens (FSFL) **7** Frosted Linear Spread Lens (FLSL) **C** Clear Glass Film w/ Honeycomb Louver **S** Soft Focus Film w/ Honeycomb Louver	**INTEGRAL** **1SN** 0-10V, 1% LIN **1SG** 0-10V, 1% LOG **PH6** Forward/Reverse Phase, 1%* *(11B & 15A packages only) **REMOTE (120V)** **1TR** Philips, 2% Forward/Reverse* *(Not available for 23W/24W) **1L2** Lutron Hi-Lume 1%, 2-Wire **1RE** Forward/Reverse * *(Not available for 23W/24W) **REMOTE (120-277V)** **URA** 0-10V Analog* *(Not available for 23W/24W) **ULH** Lutron Hi-Lume Ecosystem 1% Fade to Black **UAN** Philips Xitanium 1% 0-10V, LOG **ULN** Philips Xitanium 1% 0-10V, LIN **UEG** eldoLED, 0.1% 0-10V, LOG **UEN** eldoLED, 0.1% 0-10V, LIN **UED** eldoLED, 0.1% DALI-2, LOG **ULD** eldoLED, 0.1% DALI-2, LIN **UAS1/ UASR** Athena Control EldoLED 0.1% 120-277V* **UCS1/**Casambi Control **UCSR** EldoLED 0.1% 120-277V* *(Includes Node. Extended lead time, consult factory. UASR/UCSR includes shunt.)	**ROUGH-IN** **JBMP** 4" Sq. or 4/0 Junction Box Mounting Plate **FINISH OUT** **CMJB** * 1/2" and 3/4" Conduit Ceiling Mount Junction Box* *(Available in powdercoat finishes. Alumina finish fixtures ship with Black powdercoat CMJB.) **SMK3** 3/0 Surface Mount Kit* **SMK4** 4/0 Surface Mount Kit* *(Available in powdercoat finishes.)

POWDERCOAT FINISHES

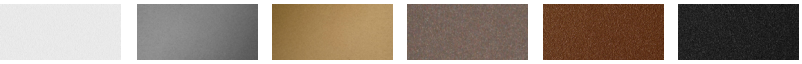

(WH) White Powder Coat | (AG) Satin Silver Powder Coat | (AU) Cashmere Gold Powder Coat | (AB) Architectural Bronze Powder Coat | (BB) Burnt Bronze Powder Coat | (BK) Black Powder Coat

ALUMINA FINISHES BY LUCIFER LIGHTING™

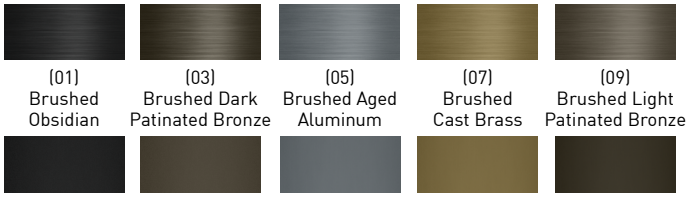

(01) Brushed Obsidian | (03) Brushed Dark Patinated Bronze | (05) Brushed Aged Aluminum | (07) Brushed Cast Brass | (09) Brushed Light Patinated Bronze

(02) Matte Obsidian | (04) Matte Dark Patinated Bronze | (06) Matte Aged Aluminum | (08) Matte Cast Brass | (10) Matte Light Patinated Bronze

PART NUMBER NOTES

- CP3X ships as e.g., CP3X048U1WHBK80S23B1SN4
- Remote driver ships as e.g., PS-RMT-80S23B-11SN
- Mounting part numbers listed on page 5

©2024 Lucifer® Lighting Company
As part of its policy of continuous research and product development, the company reserves the right to change or withdraw specifications without prior notice.

[PH] +1-210-227-7329
[FAX] +1-210-227-4967

[DATE OF REV: 05062024]

ACCESSORIES

REPLACMENT MEDIA

☐ **SFL-CY3X-03** Soft Focus Lens
☐ **HCL-CY3X-03** Honeycomb Louver *
*(Not available for Warm Dim)
☐ **CGL-CY3X-03** Clear Glass Lens *
*(Not available for Warm Dim)
☐ **FGL-CY3X-03** Frosted Glass Lens
☐ **FSFL-CY3X-03** Frosted Soft Focus Lens
☐ **FLSL-CY3X-03** Frosted Linear Spread Lens
☐ **CGL-HCL-CY3X-03** Clear Glass Film W/ Honeycomb Louver
☐ **SFL-HCL-CY3X-03** Soft Focus Film W/ Honeycomb Louver

STATIC WHITE REPLACEMENT OPTICS

☐ **RO-70-15-S** 15° optic
☐ **RO-70-20-S** 20° optic
☐ **RO-70-25-S** 25° optic
☐ **RO-70-40-S** 40° optic
☐ **RO-70-60-S** 60° optic

WARM DIM REPLACEMENT OPTICS

☐ **RO-70-20-W** 20° optic
☐ **RO-70-25-W** 25° optic
☐ **RO-70-40-W** 40° optic
☐ **RO-70-60-W** 60° optic

SUCTION CUP TOOL

☐ **CYX-TOOL-SUCTION** Baffle removal tool, provided with every 5 fixtures

EMERGENCY LIGHTING - REMOTE MOUNT ONLY

During disruption of main power, emergency battery inverter provides temporary 120V or 277V to fixture.

☐ **EMB-S-100-120-LEDX** 100 watt max capacity, 120 VAC 60Hz, 0-10V dimmable
☐ **EMB-S-100-277-LEDX** 100 watt max capacity, 277 VAC 60Hz, 0-10V dimmable
☐ **EMB-S-250-120/277-LEDX** 250 watt max capacity, 120 or 277 VAC 60Hz

***SHUNT REQUIRED FOR USE WITH ATHENA AND CASAMBI CONTROLS, CONSULT FACTORY FOR DETAILS.**

©2024 Lucifer® Lighting Company
As part of its policy of continuous research and product development, the company reserves the right to change or withdraw specifications without prior notice.
[PH] +1-210-227-7329
[FAX] +1-210-227-4967

CYLINDER 3 SUSPENDED CABLE UP/DOWN

STATIC WHITE PERFORMANCE - 3000K

LUMEN PACKAGE	WATTAGE	10° OPTIC FIELD REDUCER		15° OPTIC SOFT FOCUS LENS		20° OPTIC SOFT FOCUS LENS		25° OPTIC SOFT FOCUS LENS		40° OPTIC SOFT FOCUS LENS		60° OPTIC SOFT FOCUS LENS	
		DLVD	LPW	DLVD	LPW	DLVD	LPW	DLVD	LPW	DLVD	LPW	DLVD	LPW
80S11B	11	-	-	1169	106	1240	112	1243	112	1185	107	1156	105
80S17B/C	17	819	48	1771	104	1943	114	1931	113	1858	109	1801	105
80S23B	23	-	-	2301	100	2559	111	2541	110	2409	104	2373	103
90S11B	11	-	-	1008	91	1060	96	1062	96	1013	92	988	89
90S17B/C	17	706	42	1527	89	1661	97	1650	97	1588	93	1539	90
90S23B	23	-	-	1984	86	2187	95	2172	94	2059	89	2028	88
90W15AL (2700K-1800K)	15	-	-	-	-	1642	71	1626	70	1556	67	1491	65
90W15AD (3000K-1800K)	15	-	-	-	-	1777	77	1742	75	1685	73	1600	69
90W24BL (2700K-1800K)	24	-	-	-	-	1642	71	1626	70	1556	67	1491	65
90W24BD (3000K-1800K)	24	-	-	-	-	1777	77	1742	75	1685	73	1600	69

JA8-2022 INDICATED BY SHADING

UNIFIED GLARE RATING

10° OPTIC FIELD REDUCER	15° OPTIC SOFT FOCUS LENS	20° OPTIC SOFT FOCUS LENS	25° OPTIC SOFT FOCUS LENS	40° OPTIC SOFT FOCUS LENS	60° OPTIC SOFT FOCUS LENS
<10	<13	<10	<10	<10	<13

UPLIGHT PERFORMANCE BY CCT

CCT	WATTAGE	80S14L		90S14L	
		DLVD	LPW	DLVD	LPW
2700K	14	1198	87	988	73
3000K	14	1235	88	1074	78
3500K	14	1289	94	1129	82
4000K	14	1336	97	1062	96

CCT	WATTAGE	90W14LD (3000K-1800K WARM DIM)	
		DLVD	LPW
3000K-1800K	14	1198	73

OUTPUT MULTIPLIER

CCT	CCT SCALE
2400K	0.76
2700K	0.957
3000K	1.000
3500K	1.019
4000K	1.030

MEDIA LIGHT LOSS FACTOR

MEDIA	LIGHT LOSS FACTOR
No Lens	1.07
CGL	0.99
SFL	1.00
FGL	0.88
FSFL	0.91
FLSL	0.81
HCL	0.71
SFL+HCL	0.66

WARM DIM PERFORMANCE - SOFT FOCUS LENS - 20° OPTIC

INCANDESCENT DIMMING PROFILE

90W15AL 2700K - 1800K	Full on 100%	Dimmed to 80%	Dimmed to 70%	Dimmed to 50%	Dimmed to 20%	Dimmed to 10%	Dimmed to 2%
CCT (K)	2700	2650	2620	2520	2180	1950	1800
Light Output (Lm)	1076	861	753	538	215	108	22
Power (W)	15	12	11	8	3	1.5	0.3
Efficacy (LPW)	72	72	72	72	72	72	72

90W24BL 2700K - 1800K	Full on 100%	Dimmed to 80%	Dimmed to 70%	Dimmed to 50%	Dimmed to 20%	Dimmed to 10%	Dimmed to 2%
CCT (K)	2700	2650	2620	2520	2180	1950	1800
Light Output (Lm)	1642	1314	1149	821	328	164	33
Power (W)	24	18	16	12	5	2.3	0.5
Efficacy (LPW)	71	71	71	71	71	71	71

STANDARD DIMMING PROFILE

90W15AD 3000K - 1800K	Full on 100%	Dimmed to 80%	Dimmed to 70%	Dimmed to 50%	Dimmed to 20%	Dimmed to 10%	Dimmed to 2%
CCT (K)	3000	2950	2920	2775	2375	2000	1800
Light Output (Lm)	1144	915	801	572	229	114	23
Power (W)	15	12	11	8	3	1.5	0.3
Efficacy (LPW)	76	76	76	76	76	76	76

90W24BD 3000K - 1800K	Full on 100%	Dimmed to 80%	Dimmed to 70%	Dimmed to 50%	Dimmed to 20%	Dimmed to 10%	Dimmed to 2%
CCT (K)	3000	2950	2920	2775	2375	2000	1800
Light Output (Lm)	1777	1422	1244	889	355	178	36
Power (W)	24	18	16	12	5	2.3	0.5
Efficacy (LPW)	74	74	74	74	74	74	74

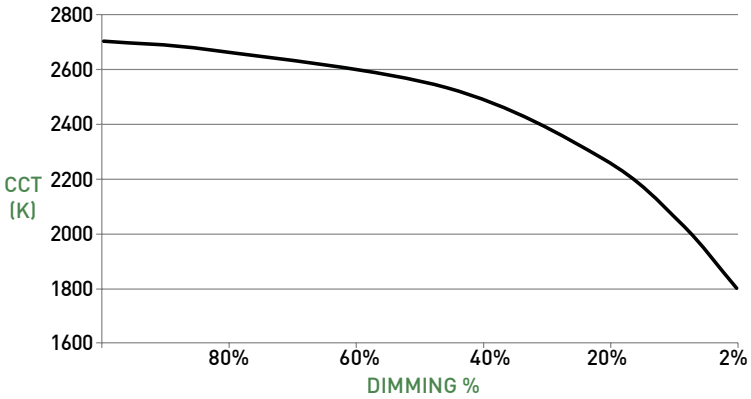

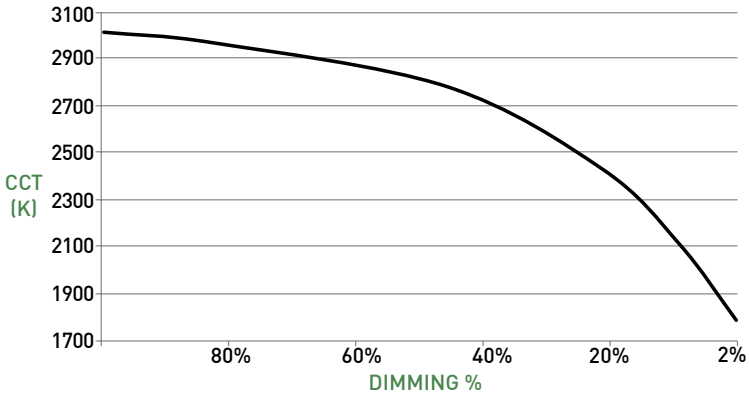

©2024 Lucifer® Lighting Company
As part of its policy of continuous research and product development, the company reserves the right to change or withdraw specifications without prior notice.

[PH] +1-210-227-7329
[FAX] +1-210-227-4967

CYLINDER 3 SUSPENDED CABLE UP/DOWN

PENDANT

A CANOPY
Die-cast 2.15" (55mm) canopy accommodates flat and slope ceiling conditions. Conceals hidden twist-on mounting hardware. Available with integral or remote driver.

B CABLE
Black and white wiring harness available; up to 192.0" length; cable may be cut in field.

C LUMINAIRE
Die-cast body with integral heat sink and LED.

D1 OPTICS
Robust light engine with optimized optic pairing integrates Reflection, Refraction, and TIR offering 10°, 15°, 20°, 25°, 40° & 60° beams. Uplight does not feature optic.

D2 10° FIELD REDUCER
Included with 10°optic. Reduces field angle by 16%.

E MEDIA
Cylinder baffle assembly can accept 2 lenses; soft focus lens or no lens standard. Uplight media features high performance diffusion film.

F BAFFLE
Die-cast baffle minimizes aperture glare and conceals view into fixture.

DIMENSIONS / DRAWINGS

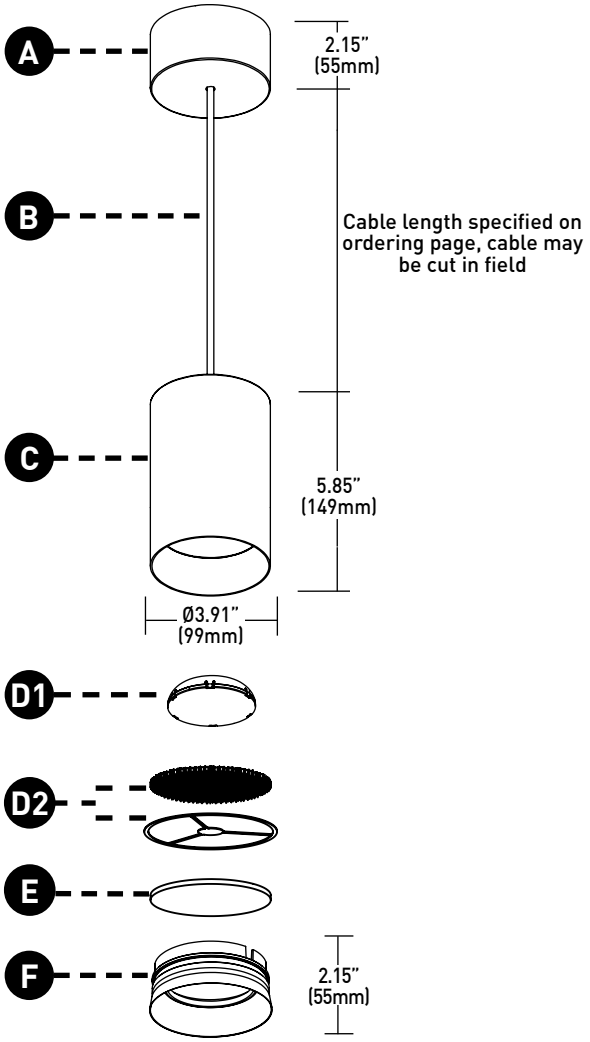

©2024 Lucifer® Lighting Company
As part of its policy of continuous research and product development, the company reserves the right to change or withdraw specifications without prior notice.

[PH] +1-210-227-7329
[FAX] +1-210-227-4967

CYLINDER 3 SUSPENDED CABLE UP/DOWN

MOUNTING

G JBMP
Mounting plate (concealed) for standard 4" square or 4" 4/0 j-box . To be installed during rough-in prior to substrate. Fixture to mount flush with minimalist transition to ceiling.

Part Number - CP3X-JBMP

H SMK3
Surface mount kit includes mounting plate and 4" concealer plate that installs between fixture and standard 3" 3/0 j-box for existing applications where standard j-box cutout is to be concealed.

Part Number - CP3X-SMK-3/0-(FINISH)

I SMK4
Surface mount kit includes mounting plate and 5" concealer plate that installs between fixture and standard 4" 4/0 j-box for existing applications where standard j-box cutout is to be concealed.

Part Number - CP3X-SMK-4/0-(FINISH)

J CMJB
Ceiling mount junction box perfectly matches the cylinder profile for a continuous, integrated look where exposed ceiling mount junction box and conduit applications apply. For use with 1/2" and 3/4" EMT conduit only. Features two conduit entrances on either side and one conduit knockout on top of j-box. J-box is IP10 rated; painted finishes only. Blank off plugs included.

Part Number - CP3X-CMJB-(FINISH)

MOUNTING NOTES

- JBMP and SMK-3/0 & 4/0 not recommended for use with pancake style j-box.
- Fixtures are surface mount and must have access to free air. For applications involving slat ceilings or confined mounting, consult Comprehensive Install Guide for required clearances for proper air flow and servicing.

REMOTE POWER SUPPLY

K PS-RMT
Remote power supply must be mounted in accessible area. Mounting device still required. Consult page 7 for dimming compatibility list. Consult install guide for complete details of suitable controls, wiring diagrams, and maximum allowable secondary run lengths between PS-RMT and cylinder.

L ATHENA / CASAMBI CONTROL
Controls integrated into remote driver assembly. All equipment is serviceable.

Athena Model Number: A-WN-D01-RF-BL & DC-OEM-DBI

Casambi Model Number: BT-S1E1-5400

M ATHENA / CASAMBI EM SHUNT
Inlcuded with drivers specified as ASR, ADR, CSR, or CDR. One required for each wireless EM fixture, requires class 2 control wiring between fixture and shunt. Features integrated test switch.

Model Number: PS-RMT-SHUNT

DIMENSIONS / DRAWINGS

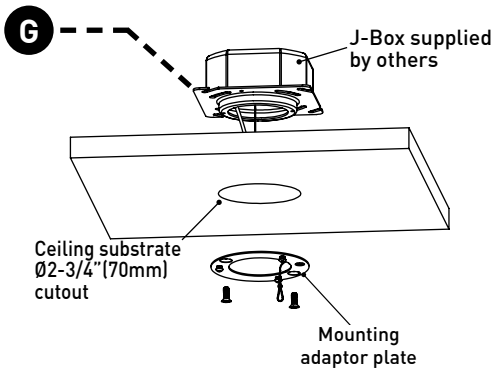

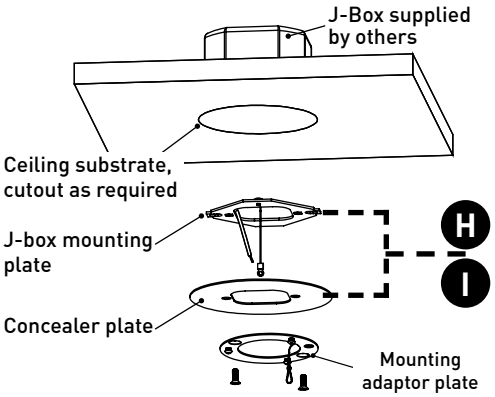

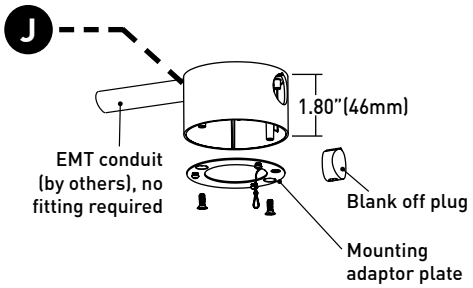

STANDARD ENCLOSURE

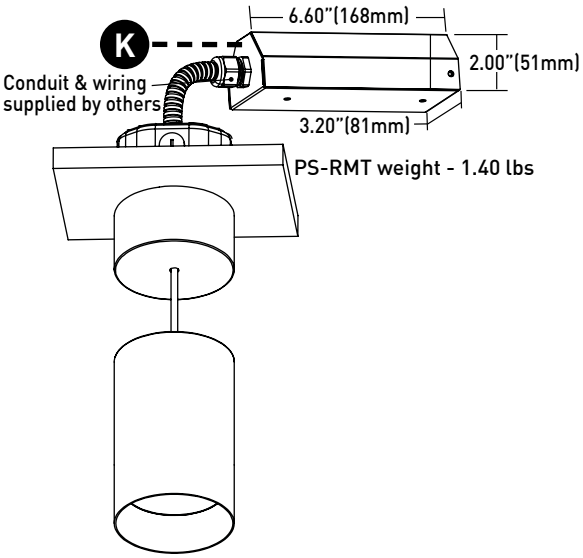

ATHENA / CASAMBI ENCLOSURE

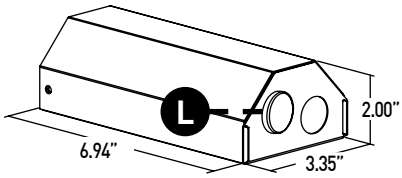

M ATHENA / CASAMBI EM SHUNT

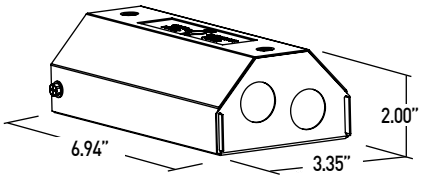

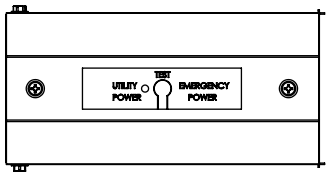

©2024 Lucifer® Lighting Company
As part of its policy of continuous research and product development, the company reserves the right to change or withdraw specifications without prior notice.

[PH] +1-210-227-7329
[FAX] +1-210-227-4967

CYLINDER 3 SUSPENDED CABLE UP/DOWN

TECHNICAL

CONSTRUCTION

Pendant: Die-cast aluminum body with integrated heat sink; painted finishes are granulated powder coat. Alumina finishes are anodized aluminum.

CMJB: Die-cast aluminum body; painted finishes are granulated powder coat.

Remote Power Supply: 22 Gauge galvanized steel.

STATIC WHITE LED

2-step MacAdam ellipse LED module available in 80+, 90+ and 95+ CRI configurations in color temperatures of 2700K, 3000K, 3500K and 4000K.
3-step MacAdam ellipse LED module available in 90+ CRI configuration in color temprtature of 2400K. Average rated lamp life: 50,000 hours. LED and driver assemblies are field-replaceable.

WARM DIM LED

3-step MacAdam ellipse warm dim LED module available in 90+ CRI configuration. 3000K or 2700K at full brightness, warming to 1800K at full dim. Average rated lamp life of 50,000 hours. LED and driver assemblies are field-replaceable.

POWER SUPPLY PERFORMANCE AND DIMMING INFORMATION

	PHASE			0-10V					ECO	DALI		ATHENA	CASAMBI
Power Supply	PH6	1TR	1L2	URA	UAN	ULN	UEG	UEN	ULH	UED	ULD	UAS	UCS
Minimum °C	-20 °C	-20 °C	0 °C	-20 °C	-20 °C	-20 °C	-20 °C	-20 °C	0 °C	-20 °C	-20 °C	0 °C	-20 °C
Maximum °C	40 °C	40 °C	40 °C	40 °C	40 °C	40 °C	40 °C	40 °C	40 °C	40 °C	40 °C	40 °C	40 °C
Dimming %	1.0%	2.0%	1.0%	1.0%	1.0%	1.0%	0.1%	0.1%	1.0%	0.1%	0.1%	0.1%	0.1%

Note: For 1TR, 1L2, ULH, UAN, ULN, UEG and UEN drivers consult chart on page 8 to confirm appropriate dimming curve for compatibility with selected control.

MAXIMUM ALLOWABLE REMOTE DRIVER WIRING DISTANCES

	WIRE AWG				
DRIVER	12	14	16	18	20
PH6	-	164'	105'	66'	40'
URA, 1TR, UAN, ULN	285'	180'	113'	71'	45'
1L2, ULH	60'	40'	25'	15'	-
UEG, UEN, UED, ULD, UAS, UCS	-	-	118'	72	46'

MOUNTING

Cylinder is supplied with a mounting adaptor plate, which integrates with required additional mounting accessories specified separately according to field application conditions, providing a minimalist transition from standard 4/0 or 4" square junction boxes and accommodating ceiling thicknesses of 0.44" (12mm) to 0.75" (19mm). Ceiling-mount junction box available for 1/2" (13mm) and 3/4" (19mm) conduit and feature concealed internal clamps for clean fitting-free conduit exit and entry.

LISTING

cTUVus listed to UL1598 standard for Dry / Damp (IP30) location. Title 24 JA8-2022 Listed. NEMA 410 Compliant. Buy American Act compliant.

DECLARE

LBC Declared.

FIXTURE WEIGHT

CP3X / Mounting - 5 lbs
Remote Driver - 1.4 lbs

LIMITED WARRANTY

Manufacturer's 1-year warranty guarantees product(s) listed to be free from defects in material and workmanship under normal use and service. 5-year warranty on LED and power supply to operate with 70% of the original flux and remain within a range of 3 duv. 10-year Lutron Advantage limited warranty available on Lutron equipped systems. Warranty period begins from the date of shipment by Seller. Consult website for full warranty terms and conditions.

CHANGE LOG

1. 03/15/2024: ADDED 10 DEGREE FIELD REDUCER, UPDATED 10 DEGREE PERFORMANCE DATA.
2. 05/06/2024: ADDED 15W WARM DIM DOWNLIGHT PACKAGE, UPDATED DRIVER WATTAGE PARAMETERS.

©2024 Lucifer® Lighting Company
As part of its policy of continuous research and product development, the company reserves the right to change or withdraw specifications without prior notice.
[PH] +1-210-227-7329
[FAX] +1-210-227-4967

CYLINDER 3 SUSPENDED CABLE UP/DOWN

DIMMING COMPATIBILITY

PHILIPS DRIVER COMPATIBILITY

Power supply **1TR** **Manufacturer**	**Family/Model #**
Lutron Electronics	DV-600P
Lutron Electronics	DVELV-303P
Lutron Electronics	NTELV-600
Lutron Electronics	MAELV-600
Lutron Electronics	SELV-300P
Lutron Electronics	DVLV-600P
Lutron Electronics	NFTU-5A
Lutron Electronics	CTCL-153P
Lutron Electronics	GL-600H
Lutron Electronics	S-600P
Lutron Electronics	PHPM
Power supply **UAN / ULN** **Manufacturer**	**Family/Model #**
Lutron Electronics	DVTV plus PP-DV
Lutron Electronics	DVSCTV plus PP-DV
Lutron Electronics	DVSTV
Lutron Electronics	DVSCSTV
Lutron Electronics	QSGRJ-XP plus GRX-TVI
Lutron Electronics	QSGRJ-XE plus GRX-TVI
Lutron Electronics	QSGR-XE plus GRX-TVI
Lutron Electronics	NFTV plus PP-DV
Lutron Electronics	NTSTV
Lutron Electronics	RMJ-5T
Lutron Electronics	RMJS-8T
Lutron Electronics	FCJS-010
Leviton	IllumaTch IP7 series
Philips	Sunrise - SR1200ZTUNV

LUTRON DRIVER COMPATIBILITY

Power supply **1L2** **Lutron Product Family**	**Part No.**
Maestro WirelessR 600 W dimmer	MRF2-6ND-120-
Maestro WirelessR 1000 W dimmer	MRF2-10ND-120-
Caséta® Wireless Pro 1000 W dimmer	PD-10NXD-
GRAFIK T™ CL® dimmer	GT-250M- GTJ-250M-
HomeWorks® QS adaptive dimmer	HQRD-6NA-
HomeWorks® QS 600 W dimmer	HQRD-6ND-
HomeWorks® QS 1000 W dimmer	HQRD-10ND-
RadioRA® 2 adaptive dimmer	RRD-6NA-
RadioRA® 2 1000 W dimmer	RRD-10ND
myRoom™ DIN power module	MQSE-4A1-D
HomeWorks® QS DIN power module	LQSE-4A1-D
HomeWorks® QS wallbox power module	HQRJ-WPM-6D-120
HomeWorks® wallbox power module	HWI-WPM-6D-120
GRAFIK Eye® QS control unit	QSGR-, QSGRJ-
GRAFIK Eye® 3000 control unit	GRX-3100- GRX-3500-
RPM-4U module (LCP, HomeWorks® QS, GRAFIK Systems™, Quantum®)	HW-RPM-4U-120 LP-RPM-4U-120
RPM-4A module (LCP, HomeWorks® QS, GRAFIK Systems™, Quantum®)	HW-RPM-4A-120, LP-RPM-4A-120
GP dimming panels	Various
Ariadni CL 250W dimmer	AYCL-253P-
Diva CL 250W dimmer	DVCL-253P- DCSCCL-253P-
Nova T CL 250W dimmer	NTCL-250-
Power supply **ULH** **Lutron Product Family**	**Part No.**
PowPak Dimming Modules	RMJ-ECO32-DV-B
PowPak Dimming Modules	FCJ/FCJS-ECO
Energi Savr Nodes	QSN-1ECO-S
GRAFIK Eye QS control unit Homeworks QS control unit	QSN-2ECO-S
GRAFIK Eye QS control unit Homeworks QS control unit	QSGRJ-_E (wireless) QSGR-_E
Quantum Hub	QP2-_ _ 2C
Quantum Hub	QP2-_ _ 4C
Quantum Hub	QP2-_ _ 6C
Quantum Hub	QP2-_ _ 8C
Homeworks QS power module myRoom Plus power module	LQSE-2ECO-D

LUTRON 2016 OEM ADVANTAGE ACCOUNT

eldoLED DRIVER COMPATIBILITY

Power supply **UEG / UEN** **Dimmer / Switch Control** **Manufacturer**	**Family/Model #**
Busch-Jaeger	2112U-101
Jung	240-10
Leviton Lighting Controls	IP710-DLX
Lightolier Controls	ZP600FAM120
Lutron Electronics	Nova T® - NTFTV
Lutron Electronics	Diva® - DVTV
Lutron Electronics	Nova® - NFTV
Merten	5729
Pass & Seymour	CD4FB-W
The Watt Stopper	DCLV1
Sensor Switch	nIO EZ
Synergy	ISD BC
Power supply **UEG / UEN** **Dimmer / Switch Control** **Manufacturer**	**Family/Model #**
Dimmer / Switch Control	GrafixEye® GRX-TVI w GRX3503
Manufacturer	Energy Savr Node™ - QSN-4T16-S
Lutron Electronics	TVM2 Module
Crestron®	GLX-DIMFLV8
Crestron®	GLXP-DIMFLV8
Crestron®	GLPAC-DIMFLV4-*
Crestron®	GLPAC-DIMFLV8-*
Crestron®	GLPP-DIMFLVEX-PM
Crestron®	GLPP-1DIMFLV2EX-PM
Crestron®	GLPP-1DIMFLV3EX-PM
Crestron®	DIN-AO8
Crestron®	DIN-4DIMFLV4
Crestron®	CLS-EXP-DIMFLV
Crestron®	CLCI-1DIMFLV2EX
ABB	SD/S 2.16.1

ANALOG DRIVERS AND DIMMERS

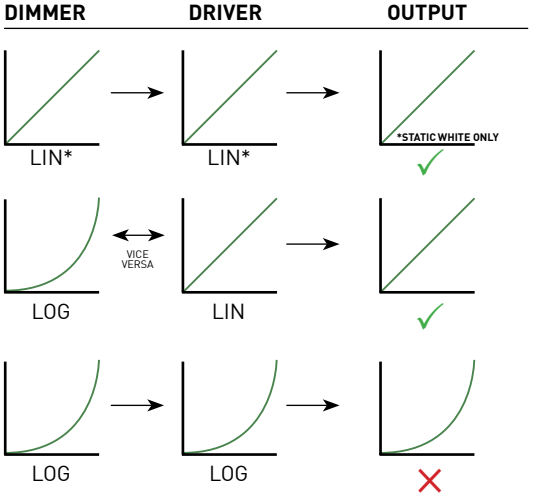

LIN = LINEAR
LOG = LOGARITHMIC
*LIN-TO-LIN NOT COMPATIBLE FOR WARM DIM

©2024 Lucifer® Lighting Company
As part of its policy of continuous research and product development, the company reserves the right to change or withdraw specifications without prior notice.

[PH] +1-210-227-7329
[FAX] +1-210-227-4967